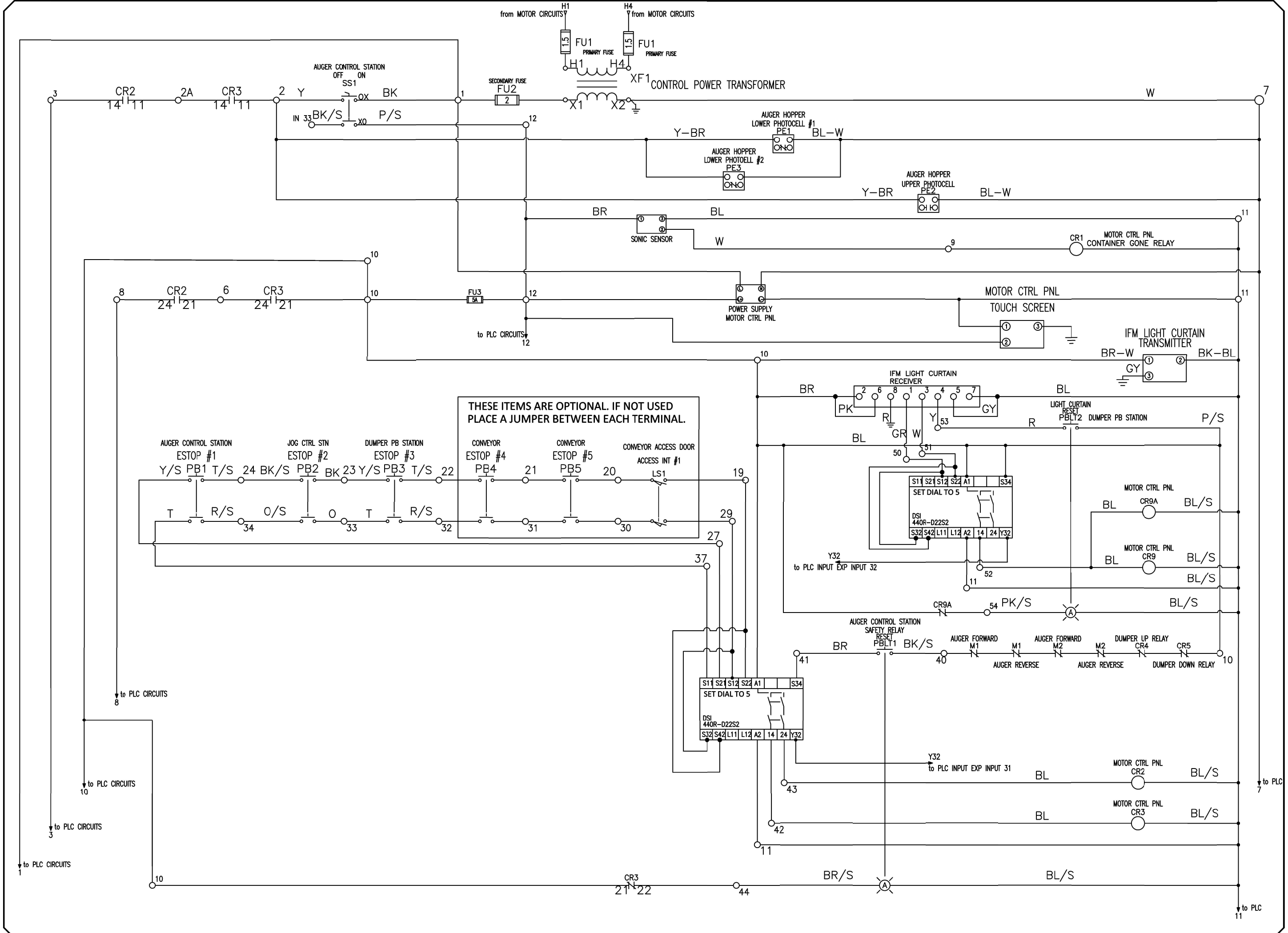

This drawing and all of the information and rights embodied and contained herein, constitutes confidential, proprietary information and trade secrets of Marathon Equipment Company. You are not permitted to use, disclose, distribute, copy, transmit, license, creative derivative works from or otherwise reproduce this drawing in whole or in part except as authorized, in writing, by Marathon Equipment Company. You agree to immediately return this drawing and any copies or reproductions thereof upon request by Marathon Equipment Company.

MARATHON
VERNON AL.
PHOENIX, NV.

NO.	DATE	REVISION	BY

DWG TITLE

ESTOP CIRCUITS W/AB 440R-D22S2 SAFETY RELAY & IFM LIGHT CURTAINS

ENGINEER JP	CHECKED BY
JOB NO	DRAWN BY JP
SCALE	DATE 12/15/21

DWG NO E-9292

SHEET NO 7 OF 8